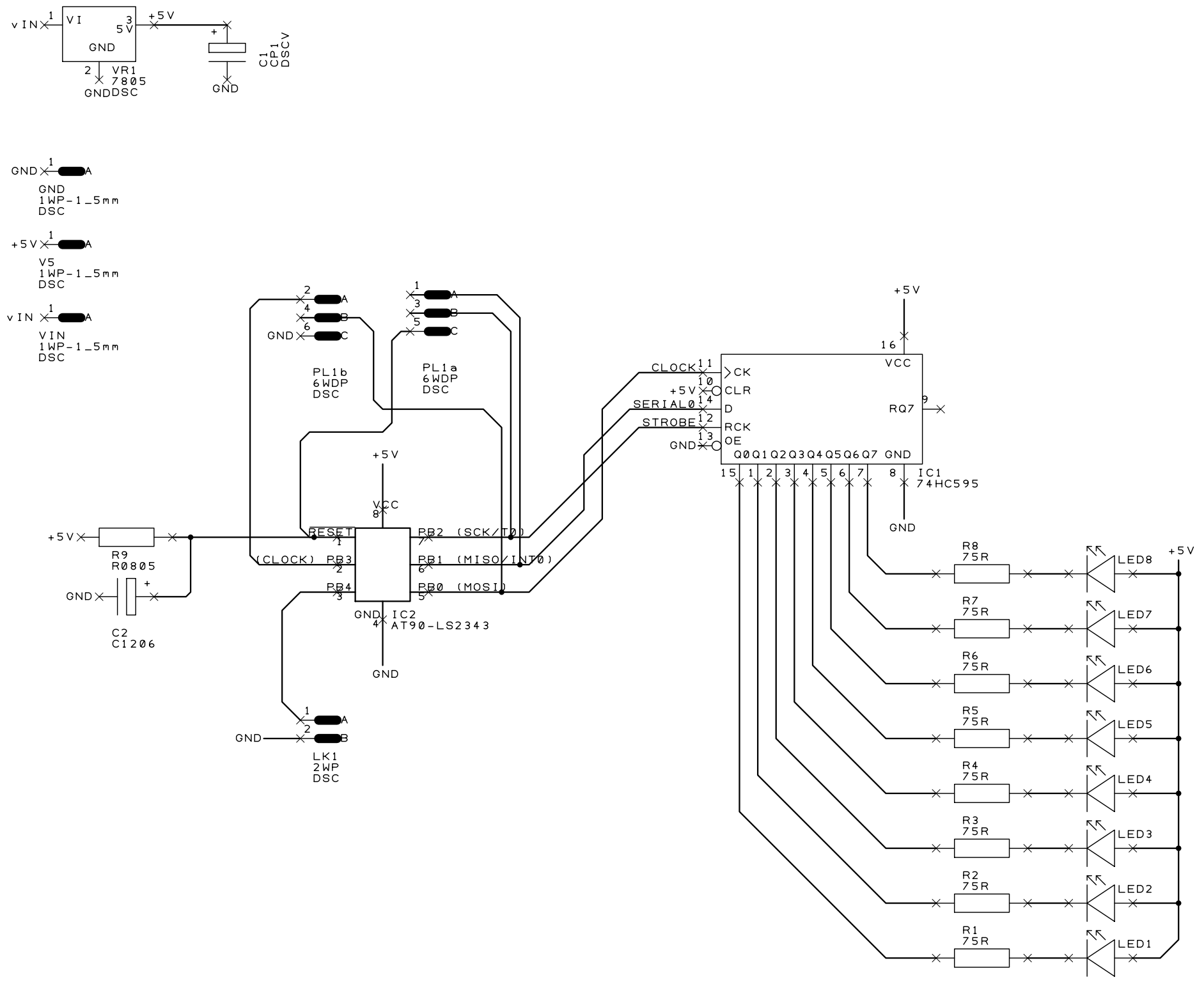
vIN
VI
5V
GND
+5V
VR1
7805
GNDDSC
C1
CP1
DSCV
GND
GND
GND
1WP-1_5mm
DSC
+5V
V5
1WP-1_5mm
DSC
vIN
VIN
1WP-1_5mm
DSC
PL1b
6WDP
DSC
PL1a
6WDP
DSC
+5V
VCC
RESET
(CLOCK) PB3
PB4
PB2 (SCK/T0)
PB1 (MISO/INT0)
PB0 (MOSI)
GND
IC2
AT90-LS2343
GND
R9
R0805
C2
C1206
LK1
2WP
DSC
CLOCK
SERIAL0
STROBE
CK
CLR
D
RCK
OE
VCC
RQ7
Q0Q1Q2Q3Q4Q5Q6Q7 GND
IC1
74HC595
R8
75R
R7
75R
R6
75R
R5
75R
R4
75R
R3
75R
R2
75R
R1
75R
LED8
LED7
LED6
LED5
LED4
LED3
LED2
LED1